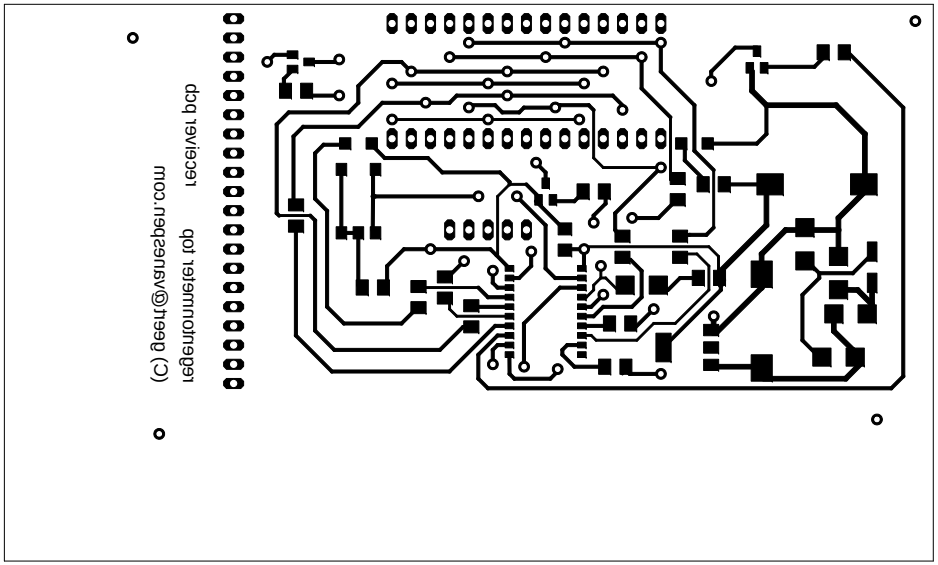
(C) geert@versteegen.com
regentonmeter.brd
receiver.brd

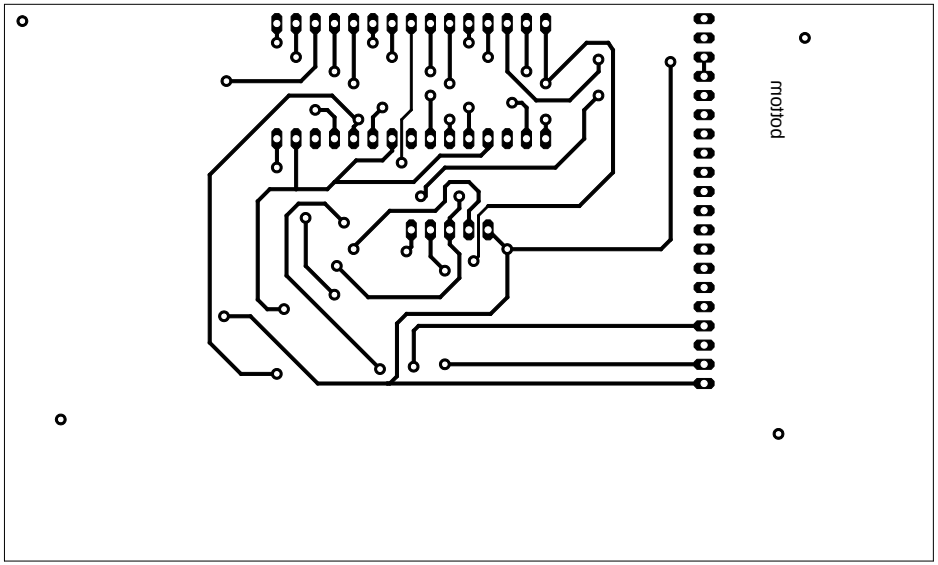
motod

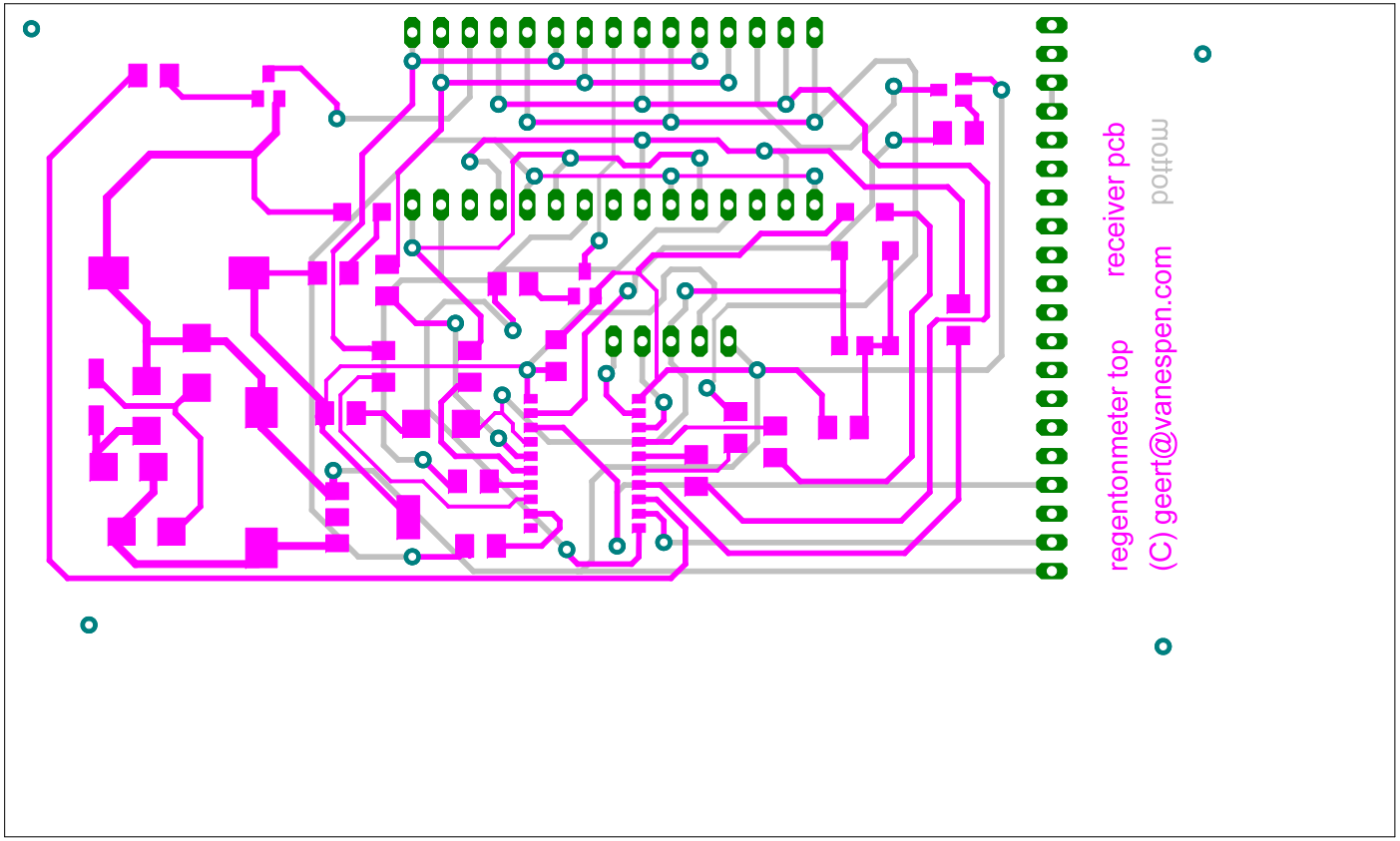
regentonmeter top
receiver pcb
(C) geert@vanespen.com
mottod

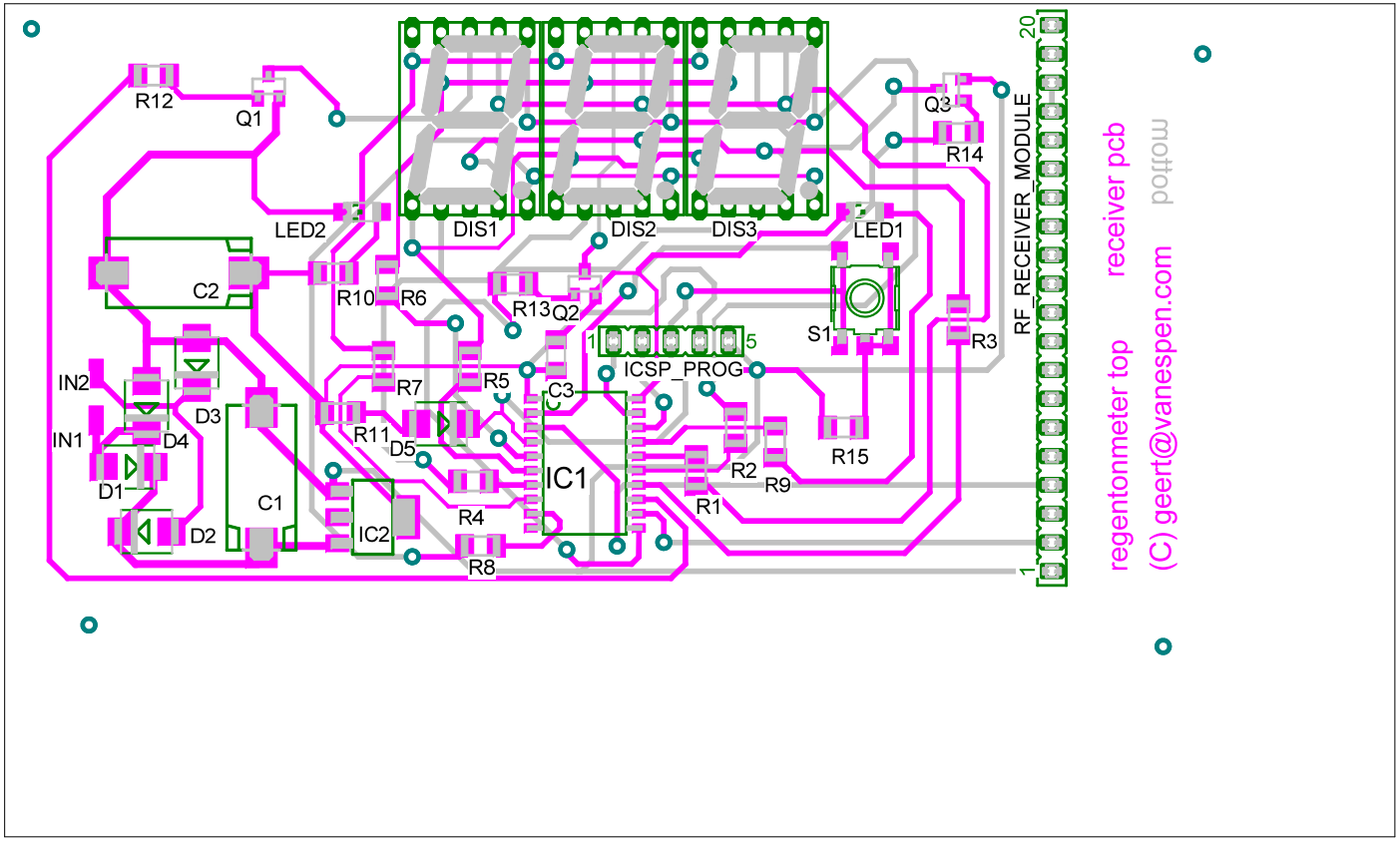
R12
Q1
LED2
C2
IN2
IN1
D1
D2
D3
D4
C1
R10
R6
R7
R11
D5
IC2
R4
R8
R5
R13
Q2
C3
IC1
DIS1
DIS2
DIS3
ICSP_PROG
1
5
R1
R2
R9
R15
S1
LED1
R3
Q3
R14
RF_RECEIVER_MODULE
20
1
regentonmeter top
receiver pcb
(C) geert@vanespen.com
motto